ST. GODFREY (P.V.T.) SECONDARY SCHOOL

2021 MSCE END TERM ONE EXAMINATION

MATHEMATICS

Subject Number: M131/I

Time Allowed: 2 hours8:00 – 10:00 am

PAPER I (100 marks)

Instructions

1. **This paper contains 10 pages. Please check**

2. Before beginning, fill in your **Name** at the top of each page of the question paper

3. Answer all the **20** questions in the spaces provided.

4. Use of electronic calculators is allowed.

5. The maximum number of marks for each question is indicated against each question

6. In the table provided on this page, **tick** against the question number you have answered.

Question Number	Tick if answered	Do not write in these columns	
1			
2			
3			
4			
5			
6			
7			
8			
9			
10			
11			
12			
13			
14			
15			

SIR GODFREY MALATA 0992 97 25 44 FOR OUR 50 PLUS ONE FREE WHATSAAP GROUPS

1. Factorize $2x^2 - 7x - 4$ completely.

(3 marks)

2. Points A and B are (a,-4) and (-3, b) respectively. If the mid-point of AB is (-2, 3), find the values of a and b .

(5 marks)

3. *Find the remainder when* $a^3 + 2a^2 - 3(a - 3)$ is divided by $a+1$

(6 marks)

4. Without using a table of a calculator simplify

$$\frac{1}{\sqrt{3}} - \frac{\sqrt{3}}{3}$$

(5 marks)

5. Subtract 1264_8 from 30155_6 and leave your answer in base 10

(4 marks)

6. A rhombus has one side of the diagonal 24cm long and a side 13cm.

What is the length of the other diagonal?

(6 marks)

7. Solve the equation $2x^2 - 3x - 4 = 0$, leaving your answer

Correct to two decimal places

(7 marks)

8. P varies as q and the square of r. when p = 36, q = 2 and r = 3.

Express q in terms of p when $r = \frac{1}{2}$

(7 marks)

9. In what proportion must two grades of tea costing K120 per kg and K150 per kg be mixed in order to produce a blend worth K125 per kg?

(3 Marks)

10. Given that $f(t) = \frac{t + 3}{2t + 1}$ find f(-8)

(5 Marks)

11. Change 126_7 to a base 4

(5 Marks)

12. Make r the subject of the formula $p = \frac{r}{1 + r}$

(5 Marks)

13. Zodwe bought a radio at K52 000.00. During its first year in use it depreciated by 10% of its value. During the second year, it depreciated by 15%. Calculate the value of the radio after two years

(5 Marks)

14. Without using a calculator, simplify $\sqrt{243} - \sqrt{3} + \sqrt{27}$ **(3 Marks)**

15. Given that the interior angle of a regular polygon is 135°, calculate the number of sides of a polygon **(5 Marks)**

16. Using a pair of compasses and a ruler only, construct a triangle **PQR** such that **QR** = 5cm, **PR** = 6 cm and **PQ** = 7 cm. In the same diagram, draw a circumscribed circle to the triangle **PQR**

(5 Marks)

17. Given that matrix M $=\begin{bmatrix} 3 & 5 \\ -1 & 1 \end{bmatrix}$ andN $=\begin{bmatrix} -1 & 1 \\ 0 & 2 \end{bmatrix}$. FindMN -M.

(5 Marks)

18. Figure 1 shows unshaded region R on a Cartesian

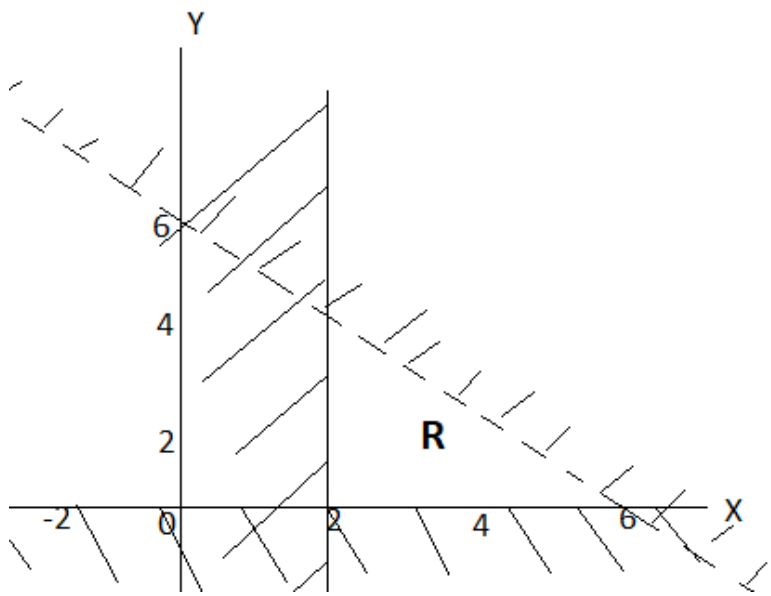

plane.

Figure 1

Write down three inequalities described by the region R **(5 Marks)**

19. A quantity Q is direclty proportional to x and the square of y. When y =30, x =50 and Q =900. Calculate the value of Q when x =20 and y =100.

(5 Marks)

20. Figure 2 shows a closed cylinder with diameter 14 cm and height

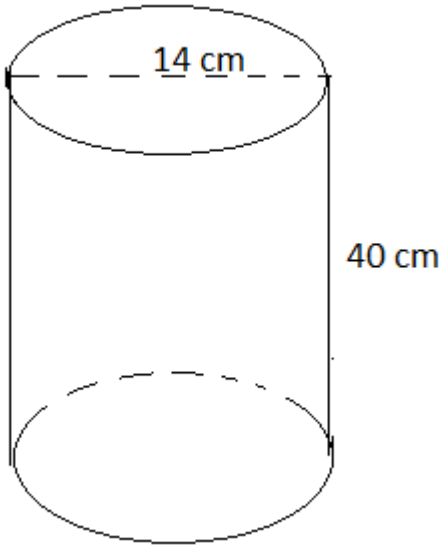

40 cm.

Figure 2

Calculate the total surface area of the cylinder (take $\pi = \frac{22}{7}$). **(4 Marks)**

THE END OF QUIATION PAPER

ECL ENGLISH COURSE

ENGLISH

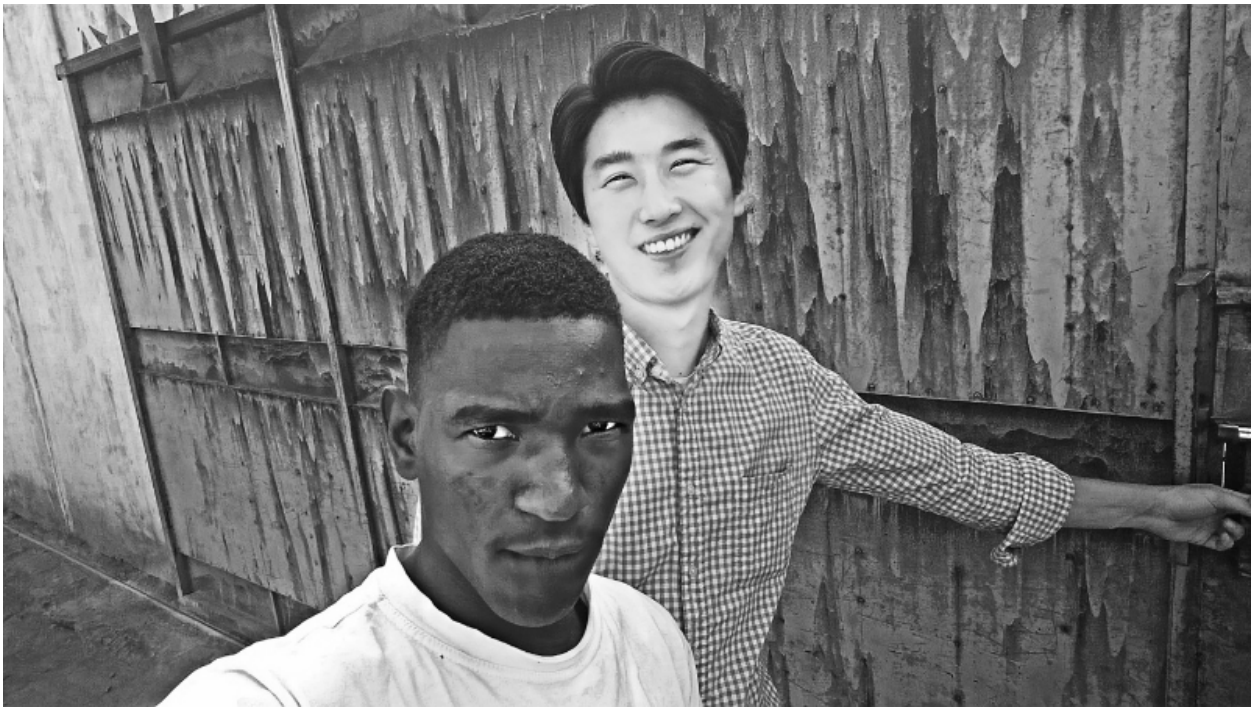

THE TEACHER OF THE MOMENT SIR GODFREY MALATA

MANY THANKS TO THOSE WHO PAID THEIRE JOING FEEE IN OUR 50 PLUS ONE WHATTSS WAPP SECRETE PRIVATE GROUP. GOD BLEESS YOU GUYS FOR YOUR PATIENCE AND TRUS TO OUR LOVELY TEACHER OF THE MOMENT

IT'S OUR WISH THAT I SEE U GUYS NEXT YEAR IN DIFFERENT UNVERSITIES AND COLLEGES BOTH NATION AND INTARNATIONAL. MALO KADALIPO YOU CAN JOIN US TODAY BY JUST SEND 200 BASITU KWA SIR GODFREY MALATA YOU CAN PAY PA AIRTEL MONEY /MPAMBA /AGENT AFTER DONE YOUR PAYMENTS YOU NEED SEND SCREEN SHOOT /AGENT CODE :0992 97 25 44 /088 976 2094 THEN YOU WILL BE ADDED POMPOOH!!!!!!!!!!!!!!!!!!

GOD IS WITH ME AND HELPING IN EVRYTHING I DO